7.3 Web Security

Secure Electronic Transaction Protocol (SET)

Credit Cards on the Internet

- Problem: communicate credit card and purchasing data securely to gain consumer trust
  - Authentication of buyer and merchant
  - Confidential transmissions
- Systems vary by
  - Type of public-key encryption
  - Type of symmetric encryption
  - Message digest algorithm
  - Number of parties having private keys
  - Number of parties having certificates

Secure Electronic Transaction (SET)

- Developed for Visa and MasterCard
- Designed to protect credit card transactions
- Confidentiality: all messages encrypted
- Trust: all parties must have digital certificates
- Privacy: information made available only when and where necessary

Participants in the SET System

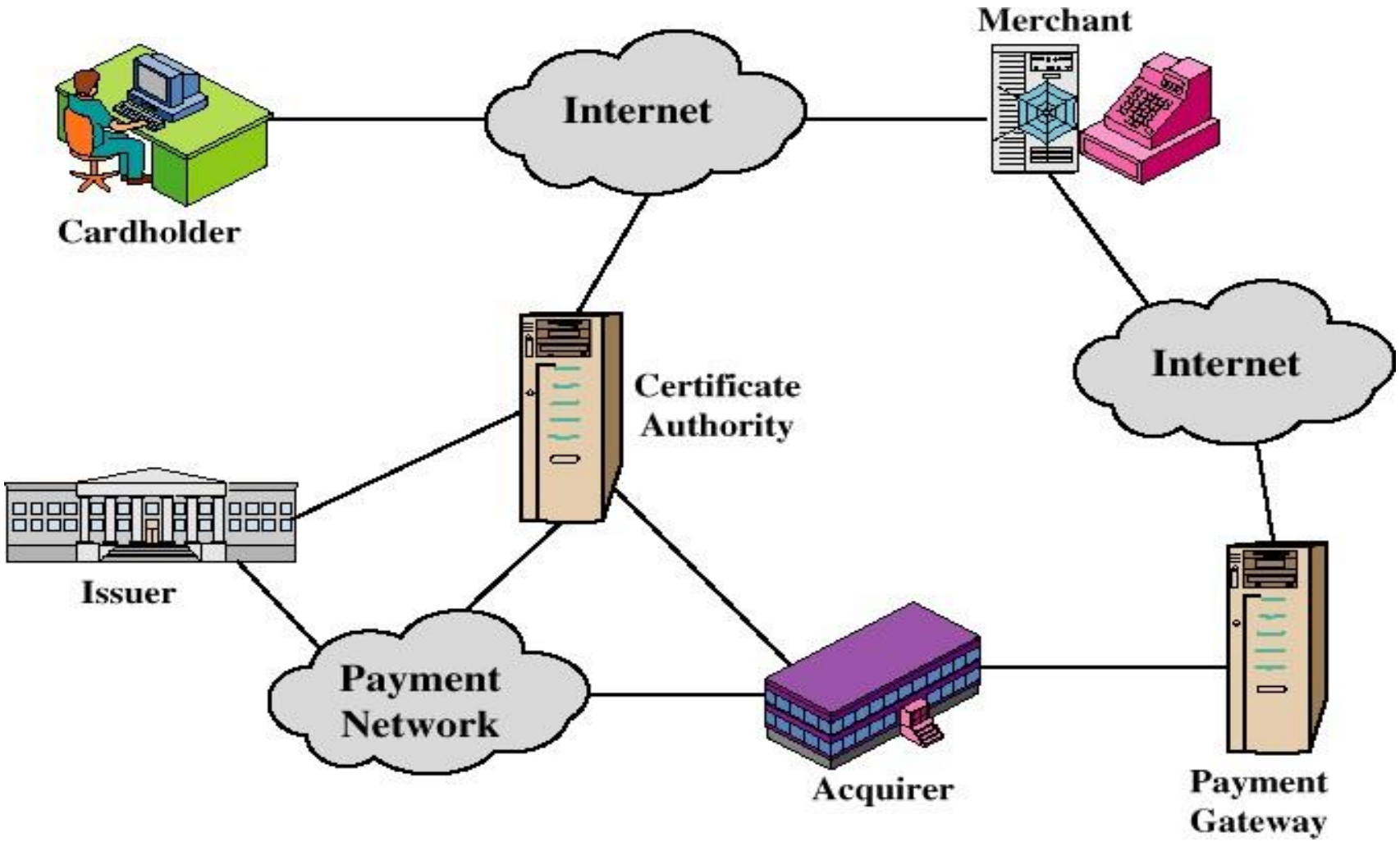

SET Business Requirements

- Provide confidentiality of payment and ordering information
- Ensure the integrity of all transmitted data
- Provide authentication that a cardholder is a legitimate user of a credit card account
- Provide authentication that a merchant can accept credit card transactions through its relationship with a financial institution

SET Business Requirements (cont'd)

- Ensure the use of the best security practices and system design techniques to protect all legitimate parties in an electronic commerce transaction
- Create a protocol that neither depends on transport security mechanisms nor prevents their use
- Facilitate and encourage interoperability among software and network providers

SET Transactions

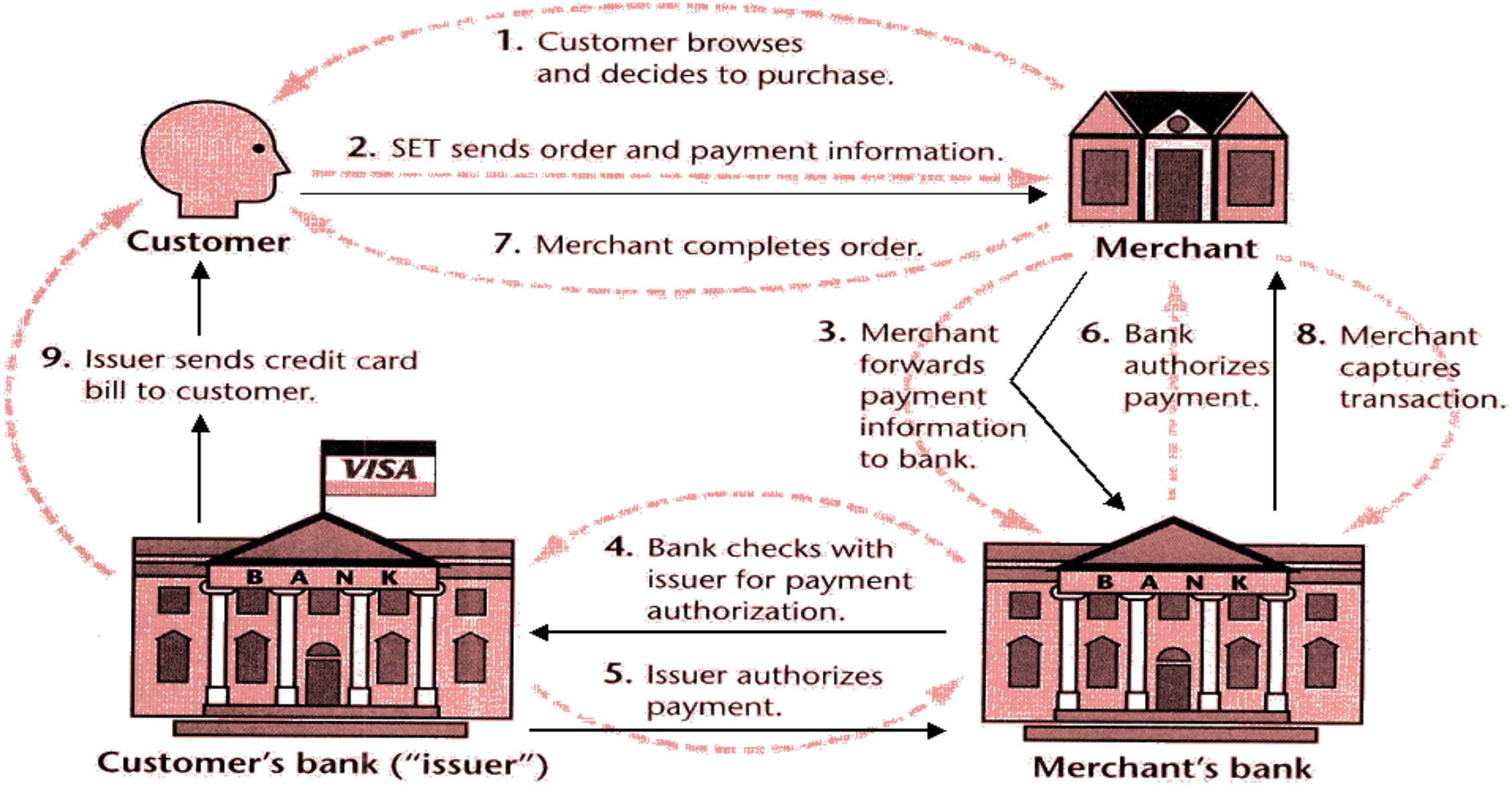

SET Transactions

- The customer opens an account with a card issuer.
  - MasterCard, Visa, etc.
- The customer receives a X.509 V3 certificate signed by a bank.
  - X.509 V3
- A merchant who accepts a certain brand of card must possess two X.509 V3 certificates.
  - One for signing & one for key exchange
- The customer places an order for a product or service with a merchant.
- The merchant sends a copy of its certificate for verification.

SET Transactions

- The customer sends order and payment information to the merchant.
- The merchant requests payment authorization from the payment gateway prior to shipment.
- The merchant confirms order to the customer.
- The merchant provides the goods or service to the customer.
- The merchant requests payment from the payment gateway.

Key Technologies of SET

- Confidentiality of information: DES
- Integrity of data: RSA digital signatures with SHA-1 hash codes
- Cardholder account authentication: X.509v3 digital certificates with RSA signatures
- Merchant authentication: X.509v3 digital certificates with RSA signatures
- Privacy: separation of order and payment information using dual signatures

Dual Signatures

- Links two messages securely but allows only one party to read each.

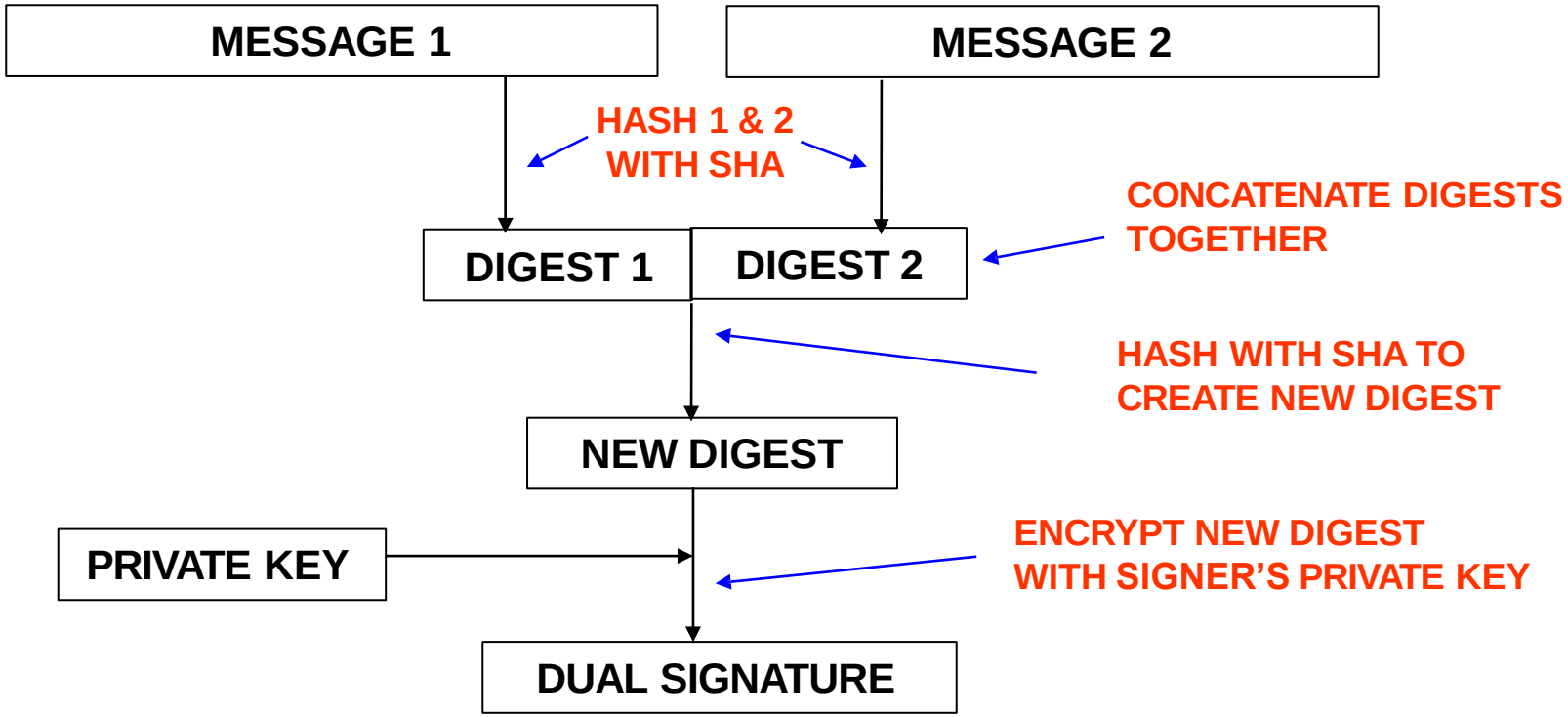

Dual Signature for SET

- Concept: Link Two Messages Intended for Two Different Receivers:
  - Order Information (OI): Customer to Merchant
  - Payment Information (PI): Customer to Bank
- Goal: Limit Information to A “Need-to-Know” Basis:
  - Merchant does not need credit card number.
  - Bank does not need details of customer order.
  - Afford the customer extra protection in terms of privacy by keeping these items separate.
- This link is needed to prove that payment is intended for this order and not some other one.

Why Dual Signature?

- Suppose that customers send the merchant two messages:
    - The signed order information (OI).
    - The signed payment information (PI).
    - In addition, the merchant passes the payment information (PI) to the bank.
- If the merchant can capture another order information (OI) from this customer, the merchant could claim this order goes with the payment information (PI) rather than the original.

Dual Signature Operation

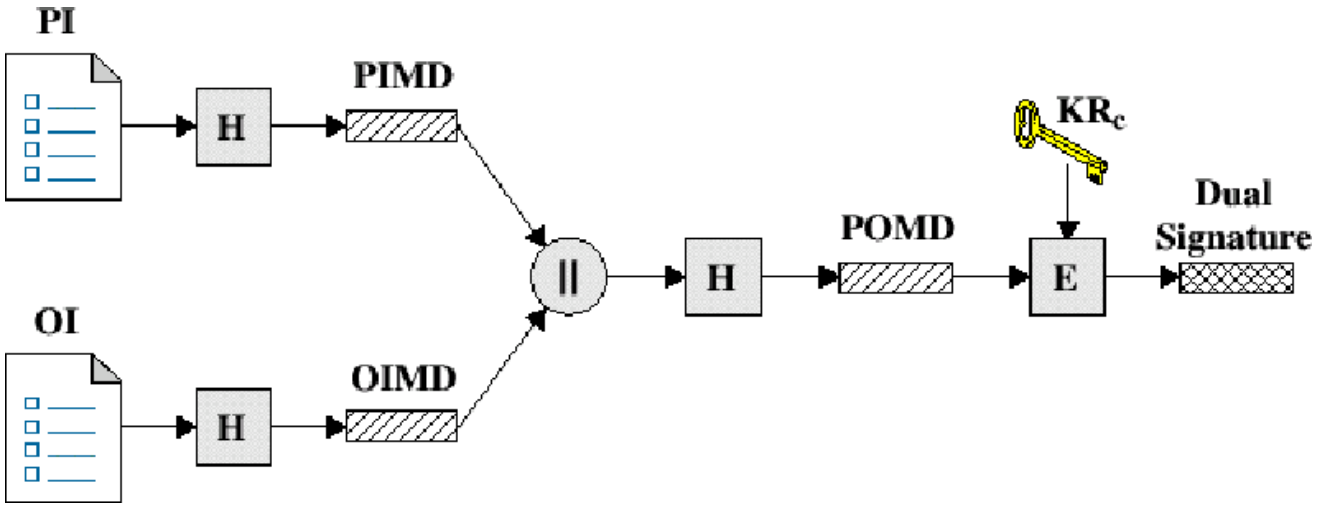

- The operation for dual signature is as follows:
  - Take the hash (SHA-1) of the payment and order information.
  - These two hash values are concatenated [H(PI) || H(OI)] and then the result is hashed.
  - Cu**stomer encrypts the final hash with a private key creating the dual signature**.

$$DS = E_{KRC} [H(H(PI) || H(OI))]$$

DS Verification by Merchant

- The merchant has the public key of the customer obtained from the customer's certificate.
- Now, the merchant can compute two values:

  $H(PIMD \mid\mid H(OI))$

  $D_{KUC}[DS]$
- Should be equal!

DS Verification by Bank

- The bank is in possession of DS, PI, the message digest for OI (OIMD), and the customer's public key, then the bank can compute the following:

  $H(H(PI) || OIMD)$

  D_{KUC} [DS]

What did we accomplish?

- The merchant has received OI and verified the signature.
- The bank has received PI and verified the signature.
- The customer has linked the OI and PI and can prove the linkage.

SET Supported Transactions

- card holder registration
- merchant registration
- purchase request
- payment authorization
- payment capture
- certificate query
- purchase inquiry
- **purchase notification**
- **sale transaction**
- **authorization reversal**
- **capture reversal**
- **credit reversal**

Purchase Request

- Browsing, Selecting, and Ordering is Done
- Purchasing Involves 4 Messages:
  - Initiate Request
  - Initiate Response
  - Purchase Request
  - Purchase Response

Purchase Request: Initiate Request

- Basic Requirements:
  - Cardholder Must Have Copy of Certificates for Merchant and Payment Gateway
- Customer Requests the Certificates in the Initiate Request Message to Merchant
  - Brand of Credit Card
  - ID Assigned to this Request/response pair by customer
  - Nonce

Purchase Request: Initiate Response

- Merchant Generates a Response
  - Signs with Private Signature Key
  - Include Customer Nonce
  - Include Merchant Nonce (Returned in Next Message)
  - Transaction ID for Purchase Transaction
- In Addition …
  - Merchant’s Signature Certificate
  - Payment Gateway’s Key Exchange Certificate

Purchase Request: Purchase Request

- Cardholder Verifies Two Certificates Using Their CAs and Creates the OI and PI.
- Message Includes:
  - Purchase-related Information
  - Order-related Information
  - Cardholder Certificate

Purchase Request

- The cardholder generates a one-time symmetric encryption key, KS,

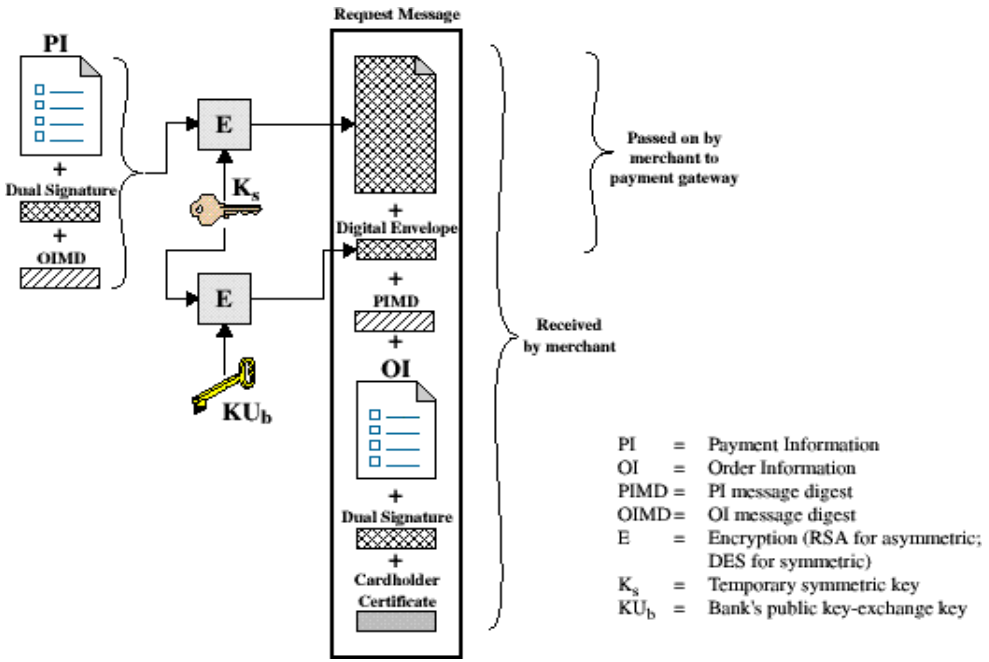

Merchant Verifies Purchase Request

- When the merchant receives the Purchase Request message, it performs the following actions:
  - Verify the cardholder certificates by means of its CA signatures.
  - Verifies the dual signature using the customer's public key signature.

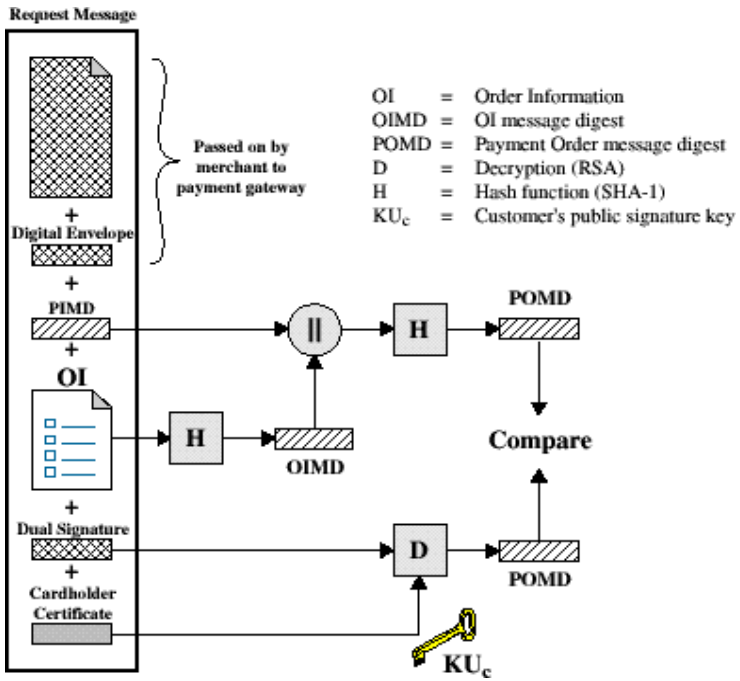

Merchant Verification (cont'd)

- Processes the order and forwards the payment information to the payment gateway for authorization.
- Sends a purchase response to the cardholder.

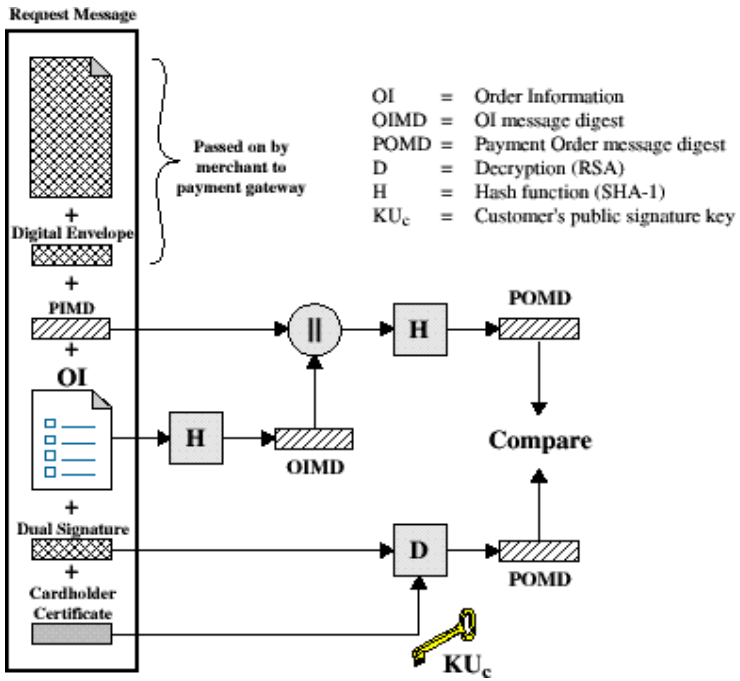

Purchase Response Message

- Message that Acknowledges the Order and References Corresponding Transaction Number
- Block is
  - Signed by Merchant Using its Private Key
  - Block and Signature Are Sent to Customer Along with Merchant's Signature Certificate
- Upon Reception
  - Verifies Merchant Certificate
  - Verifies Signature on Response Block
  - Takes the Appropriate Action

Payment Process

- The payment process is broken down into two steps:
  - Payment authorization
  - Payment capture

Payment Authorization

- The merchant sends an authorization request message to the payment gateway consisting of the following:
  - Purchase-related information
    - PI
    - Dual signature calculated over the PI & OI and signed with customer's private key.
    - The OI message digest (OIMD)
    - The digital envelop
  - Authorization-related information
  - Certificates

Payment Authorization (cont'd)

- Authorization-related information
  - An authorization block including:
    - A transaction ID
    - Signed with merchant's private key
    - Encrypted one-time session key
- Certificates
  - Cardholder's signature key certificate
  - Merchant's signature key certificate
  - Merchant's key exchange certificate

Payment: Payment Gateway

- Verify All Certificates
- Decrypt Authorization Block Digital Envelope to Obtain Symmetric Key and Decrypt Block
- Verify Merchant Signature on Authorization Block
- Decrypt Payment Block Digital Envelope to Obtain Symmetric Key and Decrypt Block
- Verify Dual Signature on Payment Block
- Verify Received Transaction ID Received from Merchant Matches PI Received from Customer
- Request and Receive Issuer Authorization

Authorization Response

- Authorization Response Message
  - Authorization-related Information
  - Capture Token Information
  - Certificate

SET Overhead

Simple purchase transaction:

- Four messages between merchant and customer
- Two messages between merchant and payment gateway
- 6 digital signatures
- 9 RSA encryption/decryption cycles
- 4 DES encryption/decryption cycles
- 4 certificate verifications

Scaling:

- Multiple servers need copies of all certificates

Summary

Discussed about:

- Introduction
- Participants
- Business Requirements
- Transactions
- Technologies
- Overhead